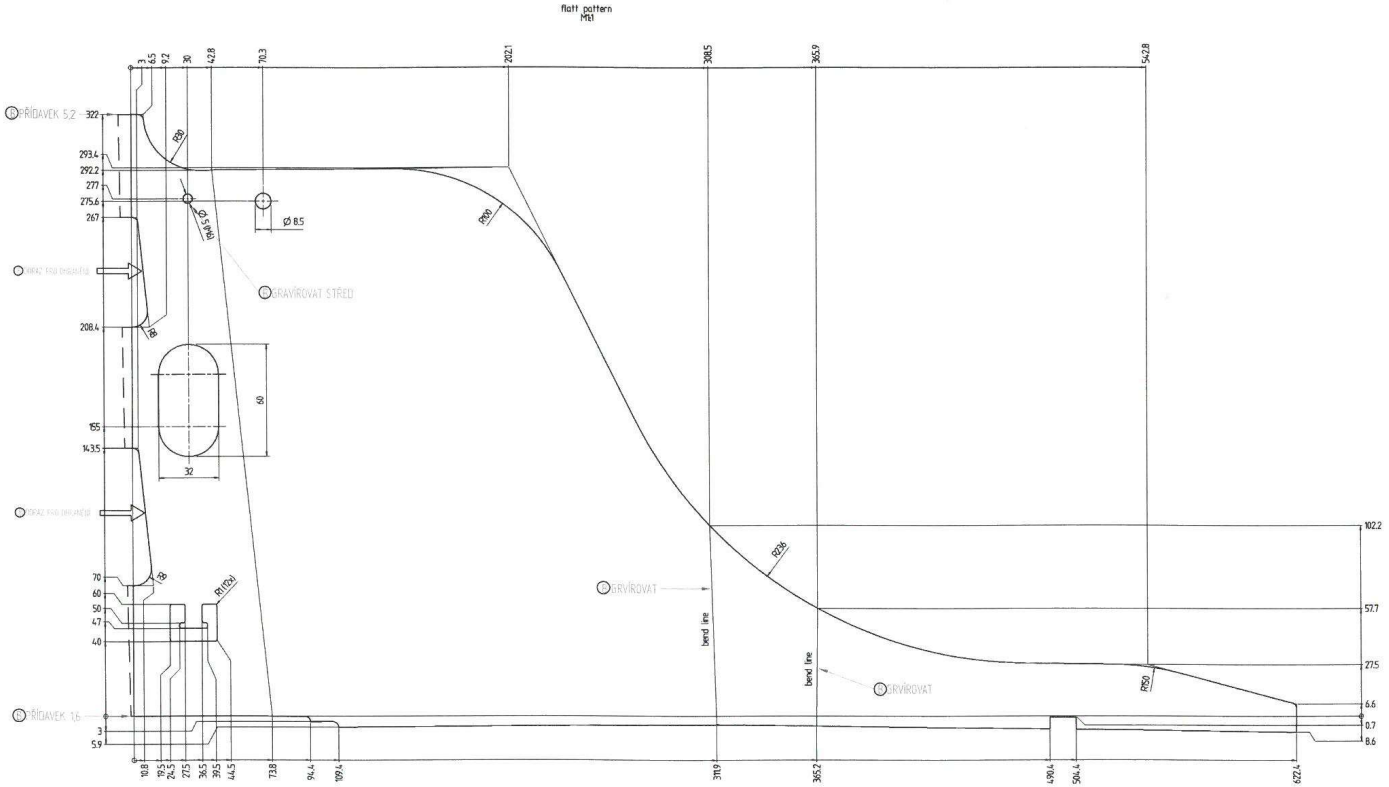

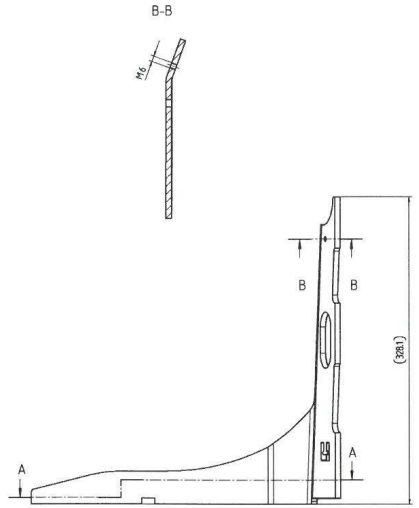

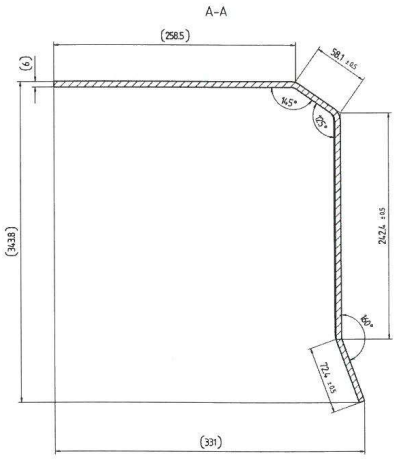

ZM/21/00319-DÍL UPRAVEN DLE POŽADAVKU TECHNOLOGA, 21.6.2021 BALARYNOVÁ

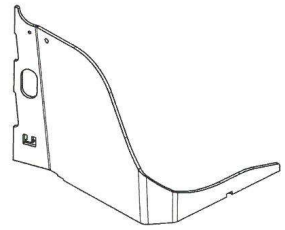

0

ARCHÍV

22.06.2021

ZM/21/00319

t=6

Bend Radii R10

undimensioned radii max. R3

ISO 9013-321

outline length WN 10535

outer	1748	mm
inner	322	mm

Condition at time of delivery

de-scaled (degree of purity SA 2 1/2 acc. ISO 8501-1)	X				
without burrs acc. WN 10370	X				
Permissible top-end rounding during flame cutting (also positive bead acc. WN 10570)					
oil-free / free of grease	X				
oiled					
oiling permissible					
Indicate the required condition at time of delivery with an X.					

First angle projection

General tolerance (GT) in mm

Size range

	30	120	400	1000
≥ 30	≥ 120	≥ 400	≥ 1000	

OT courses

L	1	2	2	3	4
H	1	2	4	6	

Lengths (L) and angle (∠) = ±GT

Tolerance Symbols ISO 1101

- ○ roundness = 1/2e-Tol.
- ▱ straightness/flatness = GT
- ◎ concentricity/run out = GT
- ⌯ symmetry = GT
- / / parallelism = GT
- ⊕ position = GT

Language: DE:EN

Index	alteration	Change no	Fr.	Tolar
00		1155397		

PFAP-Level 1 / WN 50520 — Material: S235JR or: S355MC

Inspection Bm: Ass.dim. 1 / Blank no:

	Date	Name
Drawn	14.06.2021	Schnellbar
Checked	14.06.2021	Kaiser
Authd	15.06.2021	Kuhn
M. check	15.06.2021	Tiburg

Title: side panel

Seal support

Drawing number: 11204335007

Weight: m/kg 4.3

Prod.

Scale 1:2

1:1

Sheet 1 of 1

Confidential document

Refer to protection notice ISO 16016

Dwg: 11204335005

Approved

3923421/D20/001/00 e0